Auglaize County Road Records

Road Name: Cemetery Rd.
Road Number: 161

Petitioner(s)	Year Viewed	Year Granted	Origin of Road: BOCC Journal Volume	Origin of Road: BOCC Journal Page	Origin of Road: Road Journal Volume	Origin of Road: Road Journal Page	Road Improvements: BOCC Journal Volume	Road Improvements: BOCC Journal Page	Road Improvements: Improv. Journal Volume	Road Improvements: Improv. Journal Page	Road Improvements: Deed Volume Volume	Road Improvements: Deed Volume Page	Road Improvements: Plat Book Volume	Road Improvements: Plat Book Page	Width	General Location of Road: By Road Entries
R. Burk	1850	1850	1	87	3	67									40'	SE corner Sec. 16, T6S, R6E to Wapakoneta-Fisher Road
C. Barr	1855	1855	1	255	3	170									35'	Wapakoneta-Fisher Road to NE corner Sec. 34, T5S, R6E
R. Schaub	1875	1875	3	292	3A	49									35'	SE corner Sec. 28, T6S, R6E north 33.33 Chains
J. Engleharpt	1878	1878	3	579	3A	181									40'	NE corner Sec. 9, T6S, R6E to E 1/4 corner said Sec.
H. Kuck	1884	1884	5	191	3A	367									40'	NW corner Sec. 22, T6S, R6E to 33.33 Chains north of SE corner Sec. 28 said Township
State of Ohio		1956									162	129 & 164			Varies	(Also Court Case #15535) New intersection of Cemetery Road, Blank Pike, and State Route 67
Auglaize County		1962					51	51a-51b			175	706 & 707				SE corner Sec. 33, T5S, R6E to Wapakoneta Fisher Road (25' off the west side)
Auglaize County		1977									234	353 & 357			60'	NW corner Sec. 15, T6S, R6E south 250'
Auglaize County		1978									234	526				170' south to 220' south NW corner Sec. 15, T6S, R6E (50' off the east side)
L. House Subdivision		1978											A	92		W 1/4 corner Sec. 34, T5S, R6E south 818.25' (25' off the east side)
Auglaize County		1979									234	842				W 1/4 corner Sec. 27, T5S, R6E south 265.27' (30' off the west side)
Auglaize County		1979									234	845				W 1/4 corner Sec. 27, T5S, R6E south 350' (30' off the east side)
D. Brown		1980											A	110		SE corner Sec. 28, T6S, R6E north 671.1' (30' off the west side)
Township Trustees		1984									OR 5	826 & 828			60'	600' north to 1000' north of SW corner Sec. 10, T6S, R6E
Township Trustees		1990									OR 111	510 & 511			60'	330' north to 530' north of SW corner Sec. 4, T6S, R6E
Township Trustees		1993									OR 203	71 & 110			50'	W 1/4 Sec. 34, T5S, R6E to Blank Pike
Township Trustees		1994									OR 209	973				W 1/4 Sec. 34, T5S, R6E south 277.62' (25' off the west side)

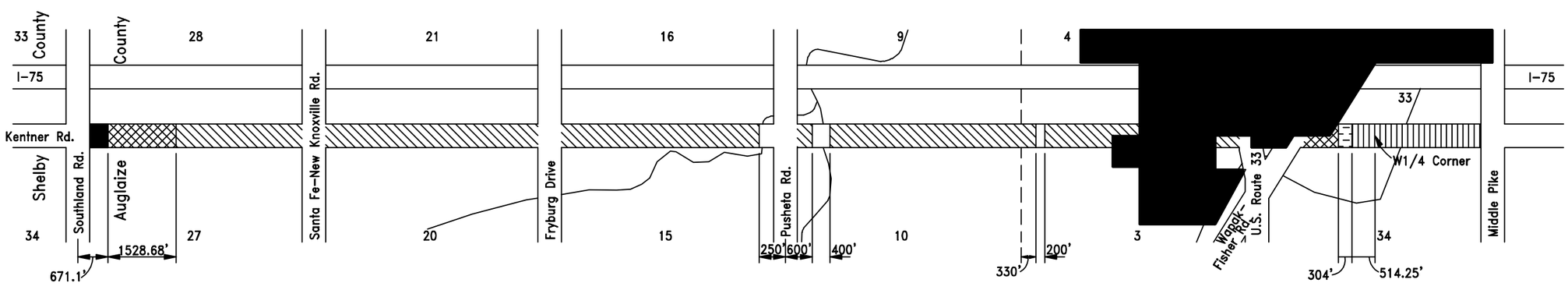

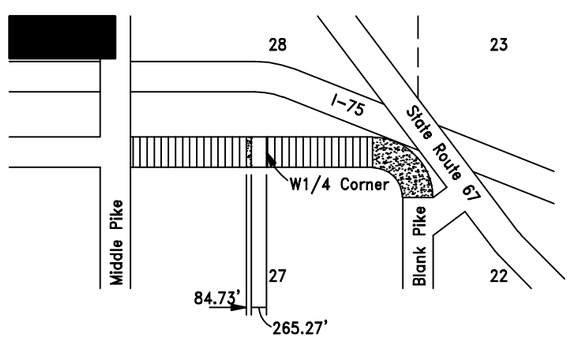

N

Right-of-way Width

- 60 ft.
- 50 ft.
- 40 ft.
- 35 ft.
- Varies
- 17.5 ft. east 30 ft. west
- 25 ft. east 17.5 ft. west

Old Road Name(s)

Quaker Run Rhina Rd. (1917)

Revised: 21 April 2009

Cemetery Rd.